BILL OF MATERIAL

SEQ	SEQ QTY	QTY TOTAL	PC MARK	DESCRIPTION	LENGTH		REMARKS	WEIGHT TOTAL
3	1	ONE	3078B1	BEAM				1720
		1	3078B1	W21x50	22	8 7/8	A992	1137
		1	W3357	W18x35	1	2 13/16	A992	43
		1	A3031	L6x3 1/2x3/8	20	0	A36	234
		1	A3043	L6x3 1/2x3/8	2	6 7/16	A36	30
		1	PL3214	PL3/8x18	8	4 7/16	A36	100
		1	BTP3085	PL3/8x11 1/4	8	5	BENT A36	121
		1	PL3119	PL3/8x4 5/8	8	1	A36	48
		1	PL3150	PL3/8x4 1/2	1	0	A36	6
		1	PL3145	PL 1/4x4 5/8	0	6 5/8	A36	2
				FIELD BOLTS				
		12		TC 3/4 Dia A325N	0	2	+1HD WASH	

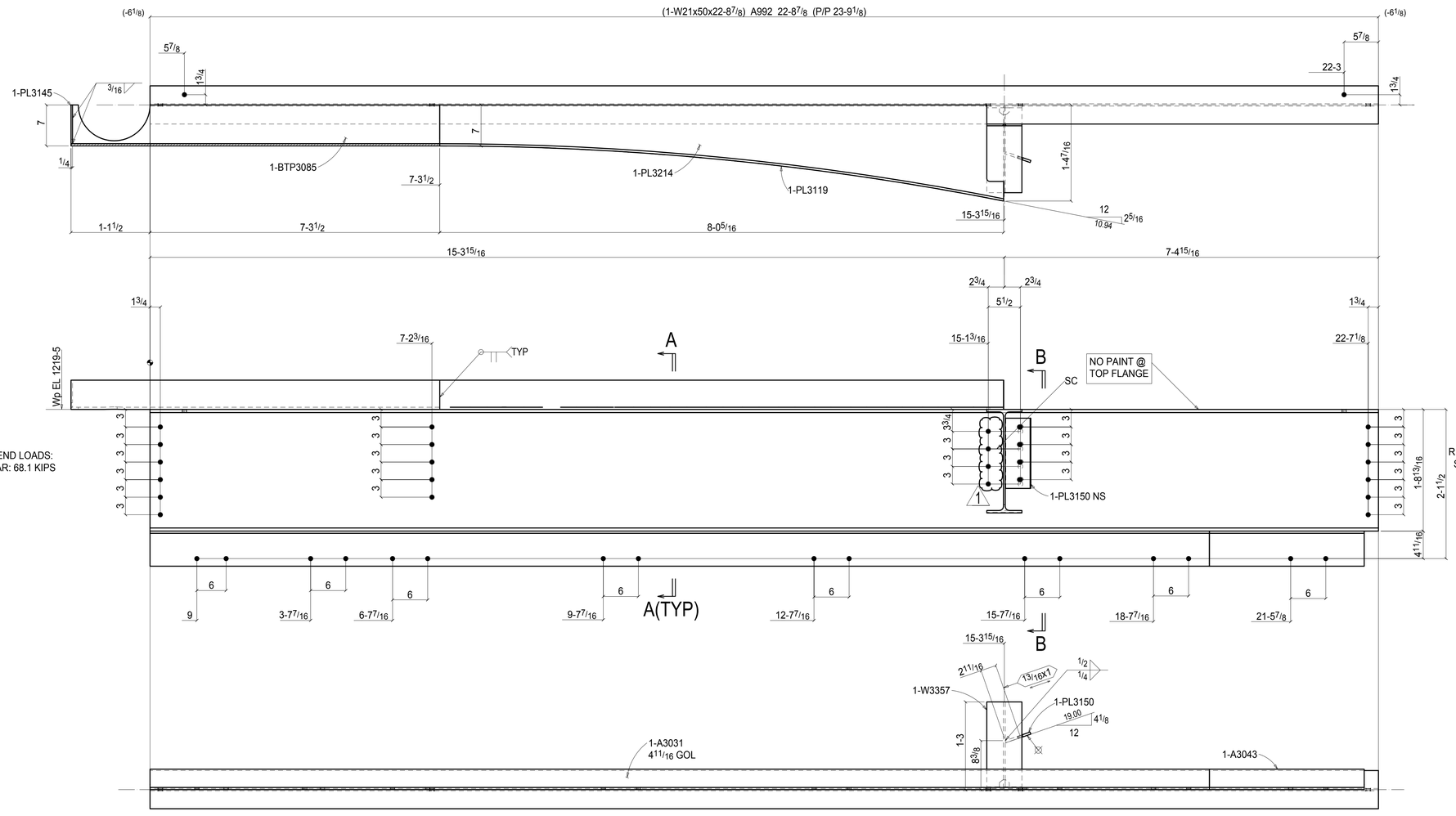

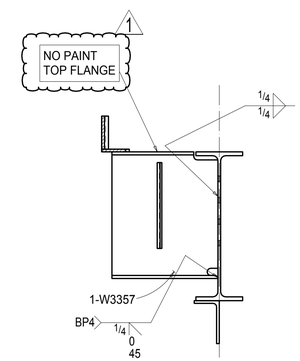

Section B-B

3078B1

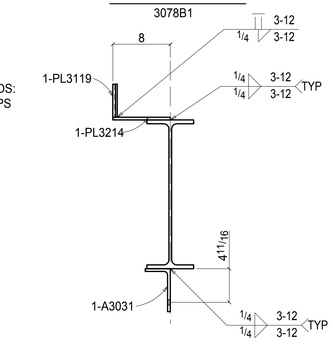

Section A-A

3078B1

ONE BEAM 3078B1

W	20 13/16x3/8
F	6 1/2x9/16
K	1 1/4x7/8

SHOP BOLTS:
16-3/4Diax2 A325N

SC- INDICATED NO PAINT 3" ALL AROUND THE HOLES

HOLES	13/16 Dia UNO
MATERIAL	ASTM A36 UNO
WELD	E70XX UNO
FINISH	SSPC-SP3
COATING	ONE COAT SHOP PRIMER

DRAWING TITLE:
BEAM DETAIL

DRAWING NO:
D-3078

020-01522-00_Seneca Valley Elementary School_I_BUP_3421
DATE: Mar 04 2021 05:09:17 PM USER: pro-user-1